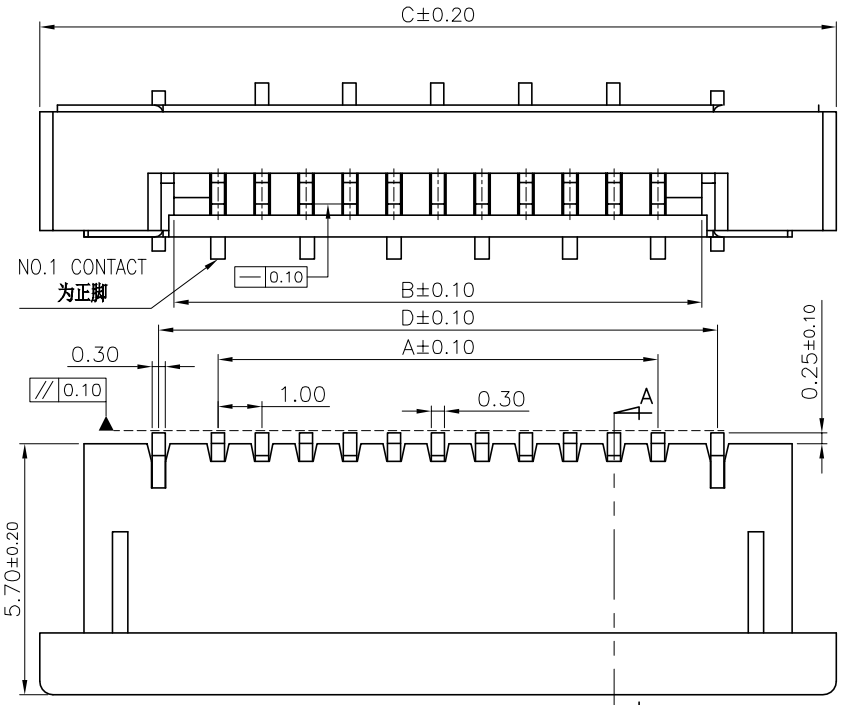

(正针 PCB LAYOUT)

Positive needle PCB LAYOUT

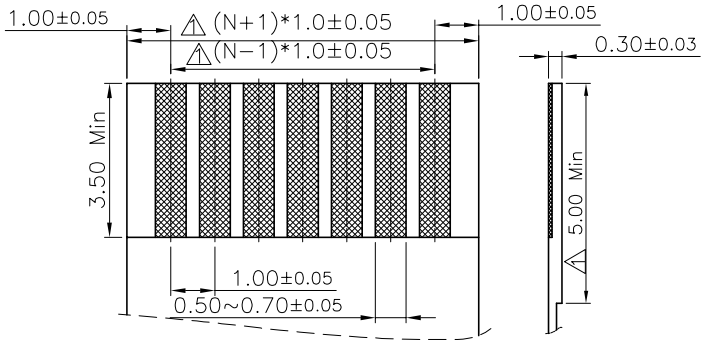

F.P.C DIMENSION(REF.)

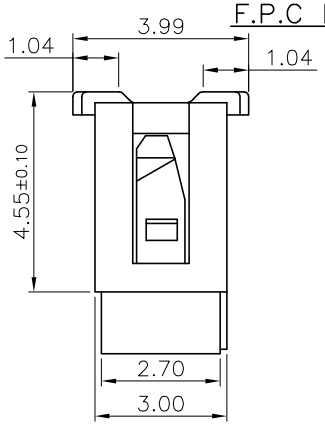

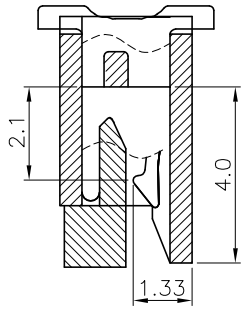

SECTION A–A

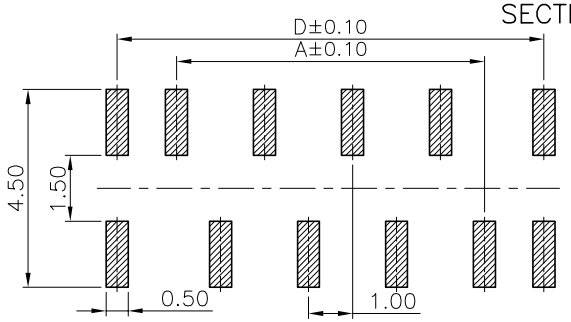

(反针 PCB LAYOUT)

Versa needle PCB LAYOUT

P数	DIM=A	DIM=B	DIM=C	DIM=D
4	3.00	5.10	11.10	5.70
5	4.00	6.10	12.10	6.70
6	5.00	7.10	13.10	7.70
7	6.00	8.10	14.10	8.70
8	7.00	9.10	15.10	9.70
9	8.00	10.10	16.10	10.70
10	9.00	11.10	17.10	11.70
11	10.00	12.10	18.10	12.70
12	11.00	13.10	19.10	13.70
13	12.00	14.10	20.10	14.70
14	13.00	15.10	21.10	15.70
15	14.00	16.10	22.10	16.70
16	15.00	17.10	23.10	17.70
17	16.00	18.10	24.10	18.70
18	17.00	19.10	25.10	19.70
19	18.00	20.10	26.10	20.70
20	19.00	21.10	27.10	21.70
21	20.00	22.10	28.10	22.70
22	21.00	23.10	29.10	23.70
23	22.00	24.10	30.10	24.70
24	23.00	25.10	31.10	25.70
25	24.00	26.10	32.10	26.70
26	25.00	27.10	33.10	27.70
27	26.00	28.10	34.10	28.70
28	27.00	29.10	35.10	29.70
29	28.00	30.10	36.10	30.70
30	29.00	31.10	37.10	31.70
31	30.00	32.10	38.10	32.70
32	31.00	33.10	39.10	33.70
33	32.00	34.10	40.10	34.70
34	33.00	35.10	41.10	35.70
35	34.00	36.10	42.10	36.70
36	35.00	37.10	43.10	37.70
37	36.00	38.10	44.10	38.70
38	37.00	39.10	45.10	39.70
39	38.00	40.10	46.10	40.70
40	39.00	41.10	47.10	41.70

NOTES:
1.HOUSING MATERIAL: HEAT RESISTANT PLASTIC UL94 V–0.
ACTUATOR MATERIAL: HEAT RESISTANT PLASTIC UL94 V–0.
2.TERMINAL MATERIAL: PHOSPHOR BRONZE.
2–1.PLATED WITH BRIGHT TIN(100%) 80u"~150u"
2–2.PLATED WITH MATTE TIN(100%) 80u"~150u"
2–3.PLATED WITH GOLD MORE THAN 1u.
3.FITTING NAIL MATERIAL: Phosphor Bronze
3–1.PLATED WITH BRIGHT TIN(100%) 80u"~150u"
3–2.PLATED WITH MATTE TIN(100%) 80u"~150u"
4.PARTS NO: 1010XX–X0XXX0

15:正脚
16:反脚

1:管装
2:卷装
3:袋装
4:其他

PIN数

1:雾锡
2:亮锡
3:镀金1u'
5:镀金3u'
6:半金锡

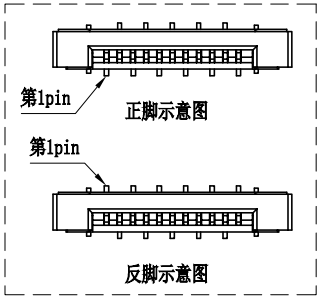

SER	REVISIONS	CHK	DATE
1	增加FFC尺寸	陈天舒	2015-01-02

UNLESS OTHERWISE SPECIFIED TOLERANCES ARE
X. ±0.1
X.X ±0.05
X.XX
X.XXX
ANG. ±0°30'

UNIT MM

客户图 Drawings

北极大电子科技有限公司
BEIJIDA ELECTRONICS TECHNOLOGY CO. LIMITED

APPROVED	DATE	COMPUTER NO		
		1010XX-X0XXX0		
CHECKED 陈天舒	DATE 2012-05-25	NAME FPC1.0-5代H3.0拉拔式立贴		
DRAWN 张运兴	DATE 2012-05-25	SIZE A4	SCALE 6:1	REV B