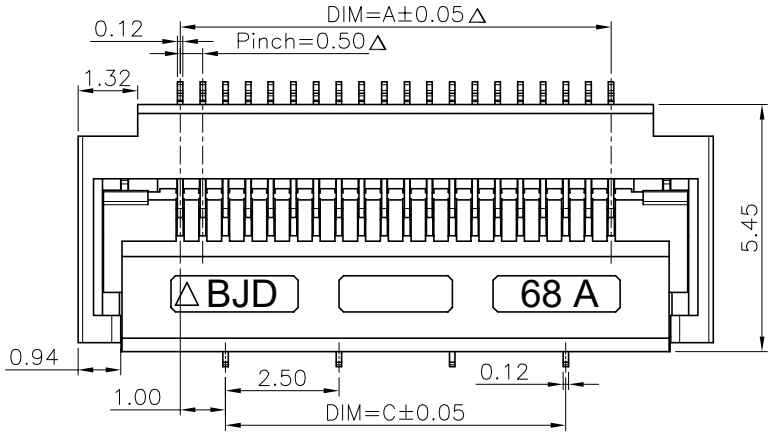

Notes:

1.Housing material: LCP GF 30%(UL94V-0),Color:Nature color.
2.Actuator material: LCP GF 30%(UL94V-0),Color:Black.
3.Terminal material: phosphor bronze.
The overall 1.25um~2.5um Nickel Plated.
contact and solder area gold plated 0.075um min.
4.Fitting nail material: phosphor bronze.
The overall 1.25um~2.5um Nickel Plated.
Plated with matte Tin(100%) 2um~3.75um.
5. "▲"Key characteristic; "△"important characteristic.
6.Recycled materials account for 20%
7.PART NO. Specifications: 101068-20XX50

Number of positions

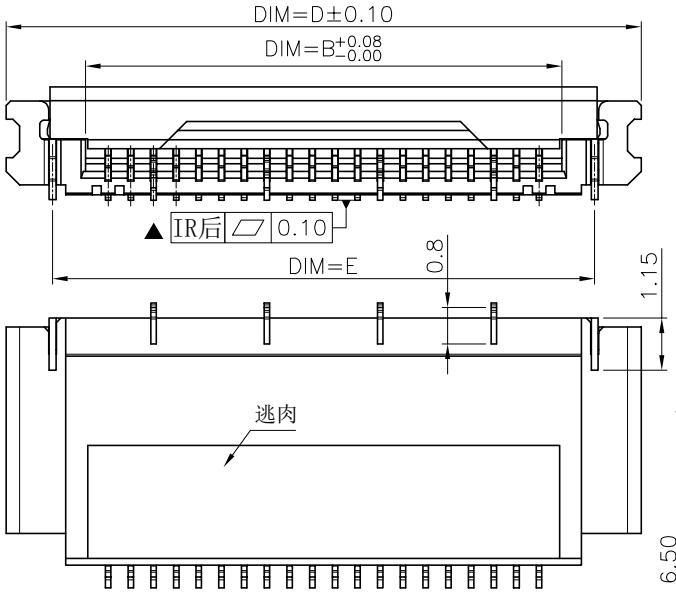

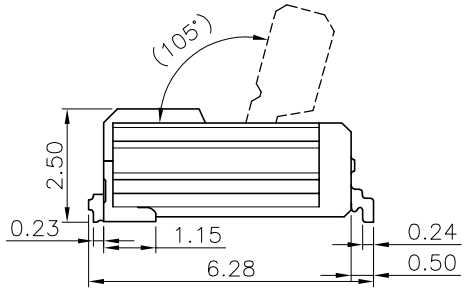

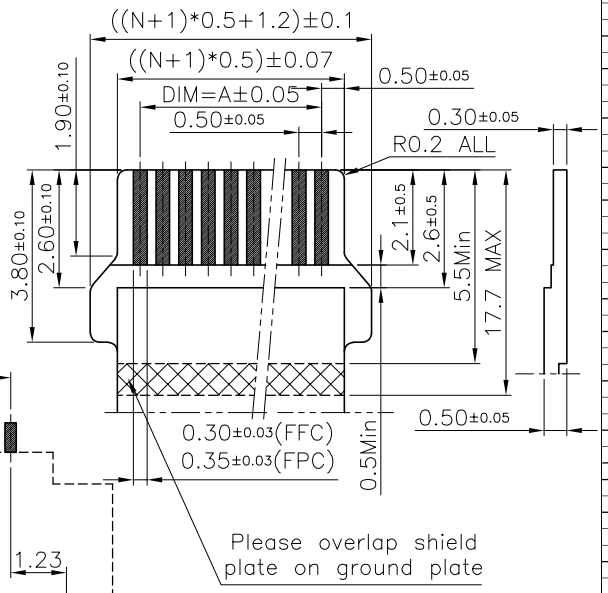

RECOMMENDED FFC/FPC DIMENSION

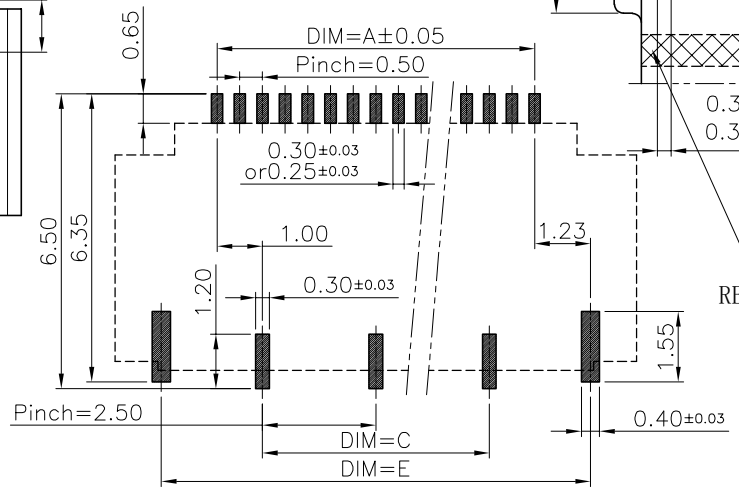

PCB LAYOUT

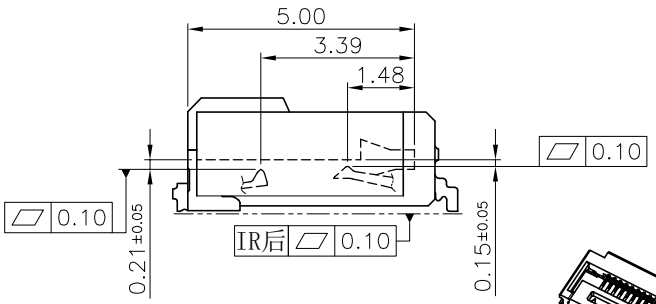

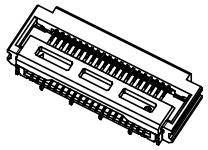

(HF)

Pin数	DIM=A	DIM=B	DIM=C	DIM=D	DIM=E	DIM=C数量
4	1.50	2.50	0.00	6.00	3.96	1
5	2.00	3.00	0.00	6.50	4.46	1
6	2.50	3.50	0.00	7.00	4.96	1
7	3.00	4.00	0.00	7.50	5.46	1
8	3.50	4.50	0.00	8.00	5.96	1
9	4.00	5.00	0.00	8.50	6.46	1
10	4.50	5.50	2.50	9.00	6.96	2
11	5.00	6.00	2.50	9.50	7.46	2
12	5.50	6.50	2.50	10.00	7.96	2
13	6.00	7.00	2.50	10.50	8.46	2
14	6.50	7.50	2.50	11.00	8.96	2
15	7.00	8.00	5.00	11.50	9.46	3
16	7.50	8.50	5.00	12.00	9.96	3
17	8.00	9.00	5.00	12.50	10.46	3
18	8.50	9.50	5.00	13.00	10.96	3
19	9.00	10.00	5.00	13.50	11.46	3
20	9.50	10.50	7.50	14.00	11.96	4
21	10.00	11.00	7.50	14.50	12.46	4
22	10.50	11.50	7.50	15.00	12.96	4
23	11.00	12.00	7.50	15.50	13.46	4
24	11.50	12.50	7.50	16.00	13.96	4
25	12.00	13.00	10.00	16.50	14.46	5
26	12.50	13.50	10.00	17.00	14.96	5
27	13.00	14.00	10.00	17.50	15.46	5
28	13.50	14.50	10.00	18.00	15.96	5
29	14.00	15.00	10.00	18.50	16.46	5
30	14.50	15.50	12.50	19.00	16.96	6
31	15.00	16.00	12.50	19.50	17.46	6
32	15.50	16.50	12.50	20.00	17.96	6
33	16.00	17.00	12.50	20.50	18.46	6
34	16.50	17.50	12.50	21.00	18.96	6
35	17.00	18.00	15.00	21.50	19.46	7
36	17.50	18.50	15.00	22.00	19.96	7
37	18.00	19.00	15.00	22.50	20.46	7
38	18.50	19.50	15.00	23.00	20.96	7
39	19.00	20.00	15.00	23.50	21.46	7
40	19.50	20.50	17.50	24.00	21.96	8
41	20.00	21.00	17.50	24.50	22.46	8
42	20.50	21.50	17.50	25.00	22.96	8
43	21.00	22.00	17.50	25.50	23.46	8
44	21.50	22.50	17.50	26.00	23.96	8
45	22.00	23.00	20.00	26.50	24.46	9
46	22.50	23.50	20.00	27.00	24.96	9
47	23.00	24.00	20.00	27.50	25.46	9
48	23.50	24.50	20.00	28.00	25.96	9
49	24.00	25.00	20.00	28.50	26.46	9
50	24.50	25.50	22.50	29.00	26.96	10
51	25.00	26.00	22.50	29.50	27.46	10
52	25.50	26.50	22.50	30.00	27.96	10
53	26.00	27.00	22.50	30.50	28.46	10
54	26.50	27.50	22.50	31.00	28.96	10
55	27.00	28.00	25.00	31.50	29.46	11
56	27.50	28.50	25.00	32.00	29.96	11
57	28.00	29.00	25.00	32.50	30.46	11
58	28.50	29.50	25.00	33.00	30.96	11
59	29.00	30.00	25.00	33.50	31.46	11
60	29.50	30.50	27.50	34.00	31.96	12
61	30.00	31.00	27.50	34.50	32.46	12
62	30.50	31.50	27.50	35.00	32.96	12
63	31.00	32.00	27.50	35.50	33.46	12
64	31.50	32.50	27.50	36.00	33.96	12
65	32.00	33.00	30.00	36.50	34.46	13
66	32.50	33.50	30.00	37.00	34.96	13
67	33.00	34.00	30.00	37.50	35.46	13
68	33.50	34.50	30.00	38.00	35.96	13
69	34.00	35.00	30.00	38.50	36.46	13
70	34.50	35.50	32.50	39.00	36.96	14

SER	REVISIONS	CHK	DATE

UNLESS OTHERWISE SPECIFIED TOLERANCES ARE
X.
X.X ±0.20
X.XX ±0.10
X.XXX
ANG. ±0°30'

UNIT MM

客户图 Drawings

北极大电子科技有限公司
BEIJIDA ELECTRONICS TECHNOLOGY CO. LIMITED

APPROVED	DATE	COMPUTER NO		
		101068-20XXX0-HF		
CHECKED 陈天舒	DATE 2016-08-15	NAME FPC0.5-22代H2.5掀盖式带接地成品		
DRAWN 陈	DATE 2016-08-15	SIZE A4	SCALE 6:1	REV A